PREVOST PIPING SYSTEM

100% ALU

Ø in	1/2”	3/4”	1”	1 1/4”	1 1/2”	2”	2 1/2”	3”	4”

CONNECTED TO INNOVATION

What is a **compressed air system?**

A compressed air system moves energy throughout a network to power workstations and machinery.

Mount the ringmain of a Prevost 100% aluminum pipe system a minimum height of 8.2 ft. from the floor.

Install smaller diameter “downpipes” or “drops” off the main line to terminate at distribution points throughout the network approximately 4 ft. from the floor. From these points various accessories can be attached (manifolds, safety couplings, filtration, hoses, etc.).

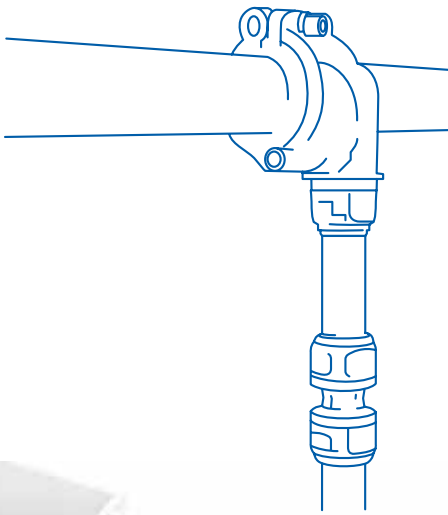

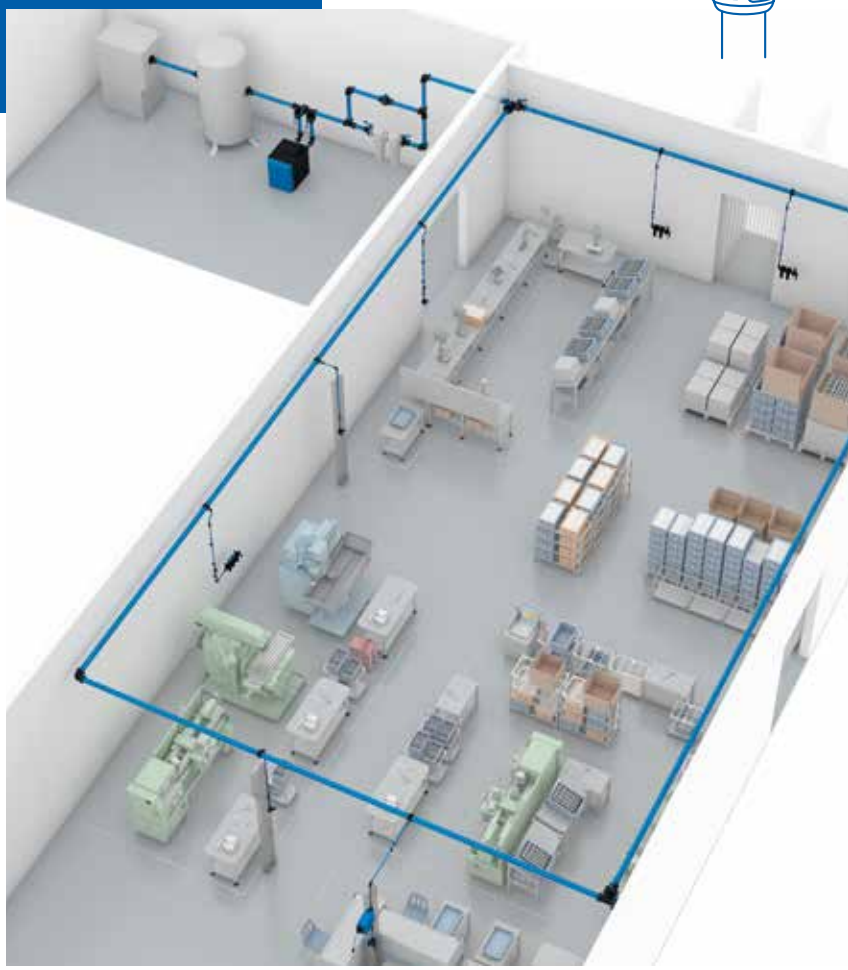

SIZING A COMPRESSED AIR SYSTEM

When designing a system, consider the following:

- desired flow rate
- the length of the main line.

Use the table to determine the appropriate pipe diameter with an operating pressure of **116 psi** and a maximum pressure drop of 5%.

SIZE AN OPEN SYSTEM

Pressure: **116 psi** | Max. pressure drop **5% (5.8 psi)** | Max. speed: **32 ft/s**

Compressor*					Length of the main line								
Power		Flow rate			50 m	100 m	150 m	300 m	500 m	750 m	1 000 m	1 300 m	1 600 m
kW	HP	Nm3/h	Nl/min	Scfm	164 ft	328 ft	492 ft	984 ft	1640 ft	2460 ft	3280 ft	4265 ft	5249 ft
2,2	3	22	367	13	1/2”	1/2”	3/4”	3/4”	1”	1”	1”	1”	1 1/4”
3	4	30	500	18	1/2”	3/4”	3/4”	1”	1”	1”	1 1/4”	1 1/4”	1 1/4”
4	5,5	40	667	24	3/4”	3/4”	1”	1”	1 1/4”	1 1/4”	1 1/4”	1 1/4”	1 1/4”
5,5	7,5	50	834	29	3/4”	1”	1”	1”	1 1/4”	1 1/4”	1 1/4”	1 1/2”	1 1/2”
7,5	10	70	1 167	41	3/4”	1”	1”	1 1/4”	1 1/4”	1 1/2”	1 1/2”	1 1/2”	1 1/2”
11	15	100	1 667	59	1”	1 1/4”	1 1/4”	1 1/4”	1 1/2”	1 1/2”	1 1/2”	2”	2”
15	20	150	2 500	88	1 1/4”	1 1/4”	1 1/4”	1 1/2”	2”	2”	2”	2”	2 1/2”
18	25	180	3 000	106	1 1/4”	1 1/4”	1 1/2”	1 1/2”	2”	2”	2”	2 1/2”	2 1/2”
22	30	220	3 667	129	1 1/2”	1 1/2”	1 1/2”	2”	2”	2”	2 1/2”	2 1/2”	2 1/2”
26	35	260	4 334	153	1 1/2”	1 1/2”	1 1/2”	2”	2”	2 1/2”	2 1/2”	2 1/2”	2 1/2”
30	40	300	5 000	176	1 1/2”	1 1/2”	2”	2”	2 1/2”	2 1/2”	2 1/2”	2 1/2”	3”
37	50	370	6 167	218	2”	2”	2”	2”	2 1/2”	2 1/2”	2 1/2”	3”	3”
45	60	450	7 500	265	2”	2”	2”	2 1/2”	2 1/2”	3”	3”	3”	3”
55	75	550	9167	324	2 1/2”	2 1/2”	2 1/2”	2 1/2”	3”	3”	3”	3”	4”
75	100	750	12 500	441	2 1/2”	2 1/2”	2 1/2”	3”	3”	3”	4”	4”	4”
90	120	900	15 000	529	3”	3”	3”	3”	3”	4”	4”	4”	4”
110	150	1 100	18 334	647	3”	3”	3”	3”	4”	4”	4”	4”	
130	175	1 300	21 667	765	3”	3”	3”	3”	4”	4”	4”		
160	215	1 600	26 667	941	4”	4”	4”	4”	4”				
200	270	2 000	33 334	1 176	4”	4”	4”	4”					

* These values may vary slightly from compressor data

THERMAL **EXPANSION**

As temperatures fluctuate up or down, aluminum naturally expands and contracts. To compensate, we recommend installing equipment along the line to absorb the movement.

- **Use a flexible hose** for small diameters
- **Install expansion kits** to accommodate large diameters.

An expansion hose is necessary when a straight line exceeds 164 ft. or more. Use this flexible hose to easily change direction of the air flow (angles) or avoid obstacles in the facility (pillars, beams, etc.).

SIZE A CLOSED SYSTEM

Pressure: **116 psi** | Max. pressure drop **5% (5.8 psi)** | Max. speed: **32 ft/s**

Compressor*					Length of the main line								
Power		Flow rate			50 m	100 m	150 m	300 m	500 m	750 m	1000 m	1300 m	1600 m
kW	HP	Nm3/h	Nl/min	Scfm	164 ft	328 ft	492 ft	984 ft	1640 ft	2460 ft	3280 ft	4265 ft	5249 ft
2.2	3	22	367	13	1/2”	1/2”	1/2”	1/2”	3/4”	3/4”	3/4”	3/4”	1”
3	4	30	500	18	1/2”	1/2”	1/2”	3/4”	3/4”	3/4”	1”	1”	1”
4	5.5	40	667	24	1/2”	1/2”	3/4”	3/4”	1”	1”	1”	1”	1 1/4”
5.5	7.5	50	834	29	1/2”	3/4”	3/4”	3/4”	1”	1”	1”	1 1/4”	1 1/4”
7.5	10	70	1 167	41	3/4”	3/4”	3/4”	1”	1”	1 1/4”	1 1/4”	1 1/4”	1 1/4”
11	15	100	1 667	59	3/4”	1”	1”	1”	1 1/4”	1 1/4”	1 1/4”	1 1/2”	1 1/2”
15	20	150	2 500	88	1”	1”	1 1/4”	1 1/4”	1 1/4”	1 1/2”	1 1/2”	1 1/2”	1 1/2”
18	25	180	3 000	106	1”	1”	1 1/4”	1 1/4”	1 1/2”	1 1/2”	1 1/2”	2”	2”
22	30	220	3 667	129	1”	1 1/4”	1 1/4”	1 1/2”	1 1/2”	1 1/2”	2”	2”	2”
26	35	260	4 334	153	1 1/4”	1 1/4”	1 1/4”	1 1/2”	1 1/2”	2”	2”	2”	2”
30	40	300	5 000	176	1 1/4”	1 1/4”	1 1/2”	1 1/2”	2”	2”	2”	2”	2 1/2”
37	50	370	6 167	218	1 1/4”	1 1/4”	1 1/2”	1 1/2”	2”	2”	2”	2 1/2”	2 1/2”
45	60	450	7 500	265	1 1/2”	1 1/2”	1 1/2”	2”	2”	2 1/2”	2 1/2”	2 1/2”	2 1/2”
55	75	550	9 167	324	1 1/2”	1 1/2”	2”	2”	2 1/2”	2 1/2”	2 1/2”	2 1/2”	3”
75	100	750	12 500	441	2”	2”	2”	2 1/2”	2 1/2”	2 1/2”	3”	3”	3”
90	120	900	15 000	529	2”	2”	2”	2 1/2”	2 1/2”	3”	3”	3”	3”
110	150	1 100	18 334	647	2 1/2”	2 1/2”	2 1/2”	2 1/2”	3”	3”	3”	3”	4”
130	175	1 300	21 667	765	2 1/2”	2 1/2”	2 1/2”	2 1/2”	3”	3”	3”	4”	4”
160	215	1 600	26 667	941	2 1/2”	2 1/2”	2 1/2”	3”	3”	3”	4”	4”	4”
200	270	2 000	33 334	1 176	3”	3”	3”	3”	3”	4”	4”	4”	4”
250	340	2 500	41 667	1 471	3”	3”	3”	3”	4”	4”	4”		
300	405	3 000	50 000	1 765	4”	4”	4”	4”	4”	4”			
350	475	3500	58334	2 059	4”	4”	4”	4”	4”				
400	540	4 000	66 667	2 353	4”	4”	4”	4”					

* These values may vary slightly from compressor data

EXPANSION COEFFICIENT: 13.7x10^{-6} in per FEET and per DEGREE F°

EXPANSION IS CALCULATED AS FOLLOWS:

C = COEFFICIENT OF EXPANSION (13.7X10^{-6}” in)

L = STRAIGHT LINE LENGTH (ft.)

ΔT° = DIFFERENCE BETWEEN MAXIMUM AND MINIMUM ROOM TEMPERATURE IN F°

DL = OVERALL EXPANSION (in)

IN OTHER WORDS: **DL** = **C** x **L** x **ΔT°**

EXAMPLE:

A 65 ft. line laid with ø 1 1/2” piping, at an ambient temperature of 59°F, can be subjected to a maximum temperature of 104°F

→ **, i.e. a difference of 77°F.**

DL: 13.7x10^{-6} (in) x 65 (ft.) **x 25** (104 - 59) **= 0.47 in**

PREVOST PIPING SYSTEM
The **100% aluminum concept**

The *PREVOST PIPING SYSTEM's* pipes and fittings are 100% aluminum, compact, lightweight and professional strength.

They can be installed easily and quickly for immediate pressurization.

The *PREVOST PIPING SYSTEM* range ensures:

- clean, high quality air at all times
- a sealed system
- an optimized flow rate
- an operating pressure range: **from -14.21 psi to + 232 psi**
- a temperature range: **from - 4°F to + 176°F**

Workstations are well supplied, accessible and ergonomically designed. The equipment is sturdy and can be easily expanded upon.

BENEFITS OF A *PREVOST PIPING SYSTEM*

COMPACT AND LIGHTWEIGHT

The 100% aluminum composition of the ***PPS*** range **creates a system that is compact, lightweight and durable.**

HIGH TECH CONSTRUCTION

Aluminum alloy, combined with external electrostatic paint and internal treatments all **protect the pipe against the oxidation and corrosion.**

100% CUSTOMIZABLE

The wide range of sizes and fittings allow the system for modular and scalable construction.

EASY AND QUICK TO ASSEMBLE

Simply insert the pipe into the ***PPS*** fitting then **tighten the nut.**

LEAK FREE WITH MINIMAL PRESSURE LOSS

The **"*PPS Grip Concept*"**, creates a secure, **leak free connection**. The smooth internal surface generates a laminar flow, a low friction coefficient and a maximum flow diameter which are all factors **to reduce pressure loss.**

COMPATIBLE WITH COMPRESSOR OILS

Aluminum and viton seals are compatible with compressor lubricants.

TOUGH MATERIAL

Aluminum guarantees long term performance:

- **mechanical strength**
- **pressure resistance**
- **shock absorbent**

THE **BENEFITS** OF ALUMINUM COMPARED TO **OTHER MATERIALS**

	Aluminum - PPS	Steel	Galvanized steel	Stainless steel
LIGHTWEIGHT	★★★	★	★	★
QUICK ASSEMBLY	★★★	★	★	★★
PIPE CAN BE PAINTED	★★★	★	★	★
COMPRESSED AIR DEDICATED MATERIAL	★★★	★	★	★
CORROSION PROTECTION	★★★	★	★	★★★
MINIMAL PRESSURE LOSS & SMOOTH SURFACE	★★★	★	★	★★
LEAK PROTECTION	★★★	★	★	★★
CLEAN AIR CERTIFICATION	★★★	★	★	★★
HIGH FLOW RATE	★★★	★	★	★★

The *PREVOST PIPING SYSTEM* **range**

CERTIFICATIONS BY INDUSTRY APPLICATION

Industry standards

Pressurized equipment

Safety and protection

Fluid properties

Environmental

VIEW OUR DOCUMENT COLLECTION

PREVOST PIPING SYSTEM
100% ALUMINUM PIPES

- **ANTI-CORROSIVE MATERIAL**
- **MINIMAL PRESSURE LOSS**
  laminar flow from smooth internal surface
- **UV AND HEAT RESISTANT**
  low coefficient of expansion
- **ISO MARKING AND COLOR**
  all diameters are available for **RAL 5012 (blue)** and **RAL 7001 (grey)** pipes. 3/4", 1" and 2" diameters are also available for **RAL 6029 (green)**.
- **NO FIRE HAZARD**
  system does not require a fire permit
- **SIMPLE TOOLS** easy to cut and chamfer for simplified installation and maintenance
- **LIGHTWEIGHT**
- **COST-EFFECTIVE**

TECHNICAL CHARACTERISTICS OF *PPS PIPE*

Material:
Extruded aluminum.
Alloy EN AW 6060 T6 UNI-EN 573-3

Treatment:
Internal/external treatment (RoHS compliant)

Coating:
Electrostatic paint

Extrusion quality:
Calibrated without welding

Compatible fluids:
Compressed air, vacuum, neutral gases

Pipe lengths:
13.12' or 19.70'

Density: 170 lb/ft^3

Pipe outside diameter:
Ø 1/2, 3/4, 1, 1 1/4, 1 1/2, 2, 2 1/2, 3, 4

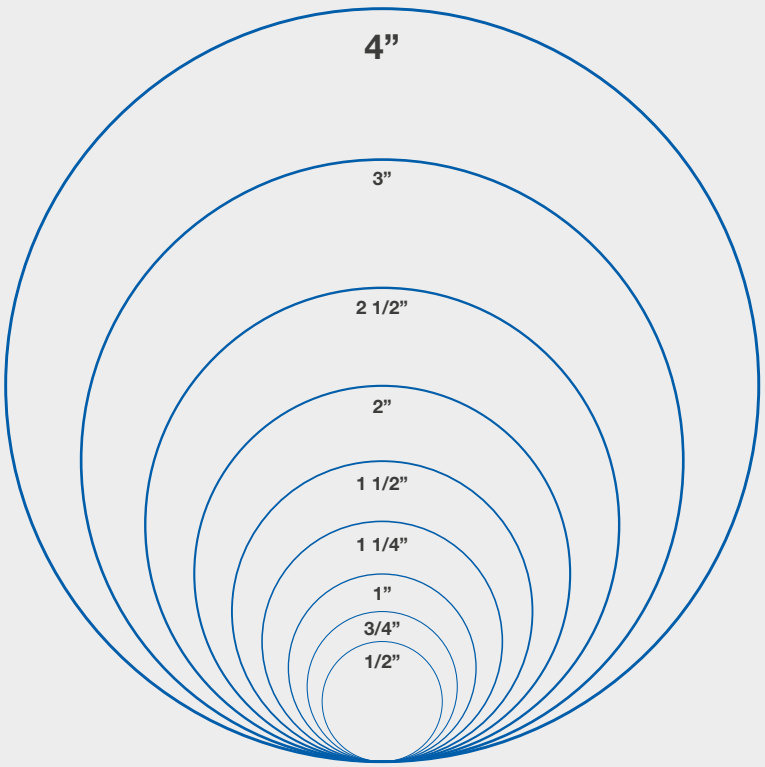

PREVOST PIPING SYSTEM
100% aluminum fittings

Prevost designs and manufactures compact, high-performance fittings.

IDENTIFICATION
Logo etched on each fitting

PRESSURE
Maximum operating pressure (bar/psi)

DIAMETER
Pipe outside diameter (mm/in)

POSITIONING
arrow indicates pipe insertion depth

Manufacturing date

THE ***PPS*** GRIP CONCEPT

The ***PPS* Grip Concept** is based on two factors.

The pipe is locked into the fitting with a stainless steel ring of teeth which penetrates the aluminum.

The double-lobed, lubricated seal guarantees a secure connection and provides optimum results even in the harshest working conditions.

LEAK-TIGHT CONNECTION

THE **INTERNAL PARTS** REMAIN ATTACHED TO THE BODY AFTER ASSEMBLY

TECHNICAL SPECIFICATIONS OF FITTINGS

Body and nut:
100% aluminum EN AB 46100

***PPS* Grip Concept:**
stainless ring

Tapping flange
to remove condensates

PRESSURE/TEMPERATURE GRAPH

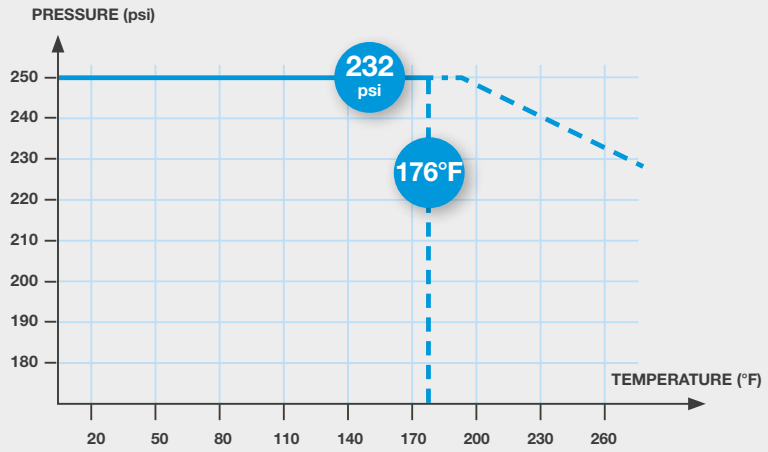

Available diameters

∅ in	1/2”	3/4”	1”	11/4”	11/2”	2”	21/2”	3”	4”

AVAILABLE FITTING OPTIONS

STRAIGHT FITTINGS

Ø 1/2 to 3”

Simple union

Reducer

Pipe cap

Straight male threaded fitting

Straight female threaded fitting

Expansion kit

Sliding union

Ø 4”

Simple union

Reducer

Pipe cap

Straight female threaded fitting

Sliding union

BENT FITTINGS

Ø 1/2 to 3”

90° elbow

90° elbow threaded male

45° elbow

Ø 4”

90° elbow

T-PIECE FITTINGS

Ø 1/2 to 3”

Equal T-piece

Reduced T-piece

Female threaded T-piece

Ø 4”

Equal T-piece

Female threaded T-piece

CROSS FITTINGS

Ø 1/2 to 1 1/4”

Cross connector

Ø 1 1/2 to 4”

Cross connector

TAPPING FLANGE

A tapping flange connects a down pipe (drop) to workstations. Its purpose is to replace a traditional **"gooseneck"** configuration and reduce condensates in the line.

Flanges transport clean air from the side of the pipe to workstations. Any remaining condensates which remain at the bottom of the pipe are then evacuated via drains located throughout the system.

Tapping flanges can quickly integrate into existing systems, no disassembly required.

The flange is **compact** and equipped with an anti-rotation system which securely locks the fitting in place.

TAPPING FLANGES BENT

Ø 3/4 to 3”

Ø 4”

TAPPING FLANGES FEMALE THREADED

BENT

Ø 3/4 to 3”

STRAIGHT

Ø 3/4 to 4”

TAPPING FLANGES FOR DRILLING UNDER PRESSURE

Ø 3/4 to 4”

VALVES

Ø 1/2 to 2”

Pipe/pipe

Female threaded/pipe

Threaded male/pipe

Ø 2 1/2”

Pipe/pipe
aluminum body

Ø 2 1/2 to 4”

Pipe/pipe

Female threaded/pipe

Compact Connection Concept - *CC concept*

The CC Concept is the solution for

- Directly connect two fittings
- Optimize space
- Specifically designed for “compressor rooms”

STRAIGHTFORWARD, FAST CONNECTION METHODS	CHARACTERISTICS AND BENEFITS
1 CONNECTION WITH A FLANGE 	■ ANSI/ASME general-purpose flange ■ Ideal for connecting a system to a compressor, a dryer or to an existing system through the standard ANSI flange
2 CONNECTION WITH A CLAMP 	■ Quickly connect two fittings with a clamp instead of cutting the pipe or installing a flange ■ Design allows for easy installation and elimination of assembly errors

3 CONNECTION VALVE

THE FULLY CUSTOMIZABLE CC CONCEPT

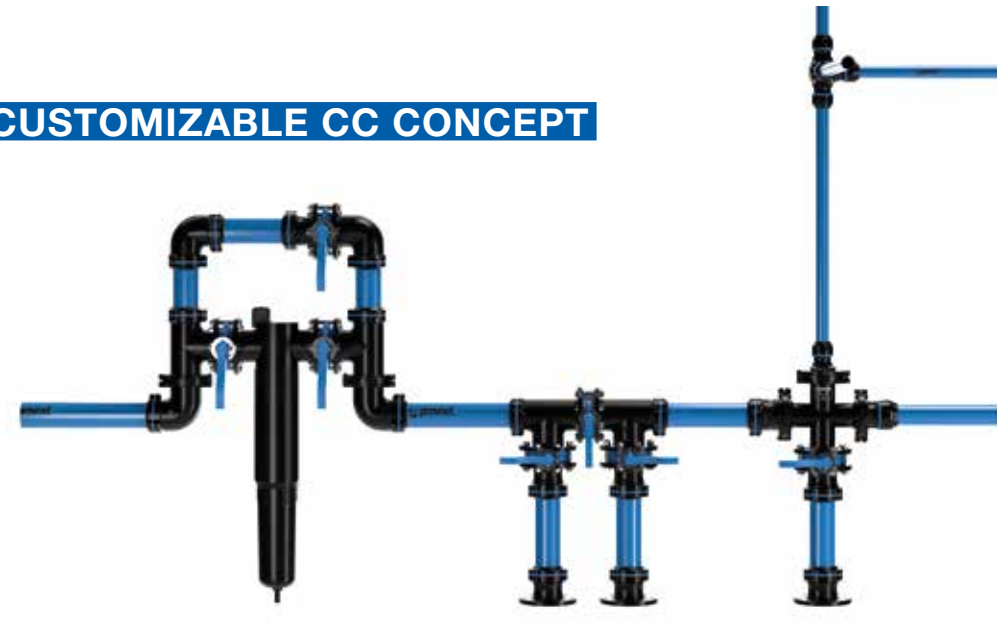

COMPACT CONNECTION FITTINGS - *CC CONCEPT*

UNIONS

Connector union with 2 different diameters

Connector union

ELBOWS

Equal 90° elbow connector

45° elbow

T-PIECES

1-connector T-piece with 2 different diameters

2-connector T-piece

3-connector T-piece

CROSS FITTING

4-connector cross-piece

CONNECTING PARTS

Clamp

Flange

ALUMINUM VALVES

Ø 2 1/2”

1-connector valve

2-connector valve

ACCESSORIES

Female threaded body

Plug

O-ring seal

Male threaded body

Valve

Bolts/nuts

Safety and energy savings

REMOTE CONTROLLED
PNEUMATIC SAFETY VALVE

100% ALU

- **Compact and lightweight**
- **Easy to operate - even at ceiling height**
- **Quick to install**
- **100% aluminum**
- **Fully pneumatic**
- **Available in Ø 1 1/2 - 2” - 3” - 4”**

VALVES
ø 1 1/2” to 3”

CC CONCEPT
ø 4”

Every compressed air installation, replacement, repair or retrofit should include at least one shut off valve.

This shut off valve can quickly depressurize certain areas of the system in the event of emergency or if maintenance is necessary. By isolating only targeted areas of the system, productivity will not be lost.

Push button

Key switch

VALVE REMOTE
CONTROL

Several options to control the valve are available:

- **PUSH BUTTON**
  Immediately stops air flow with a push of a button
- **KEY SWITCH**
  Provides limited access to the valve control

Guidelines for **installing a compressed air system**

Ideally, the compressor **room** should be:

- **spacious**
- **ventilated & insulated**
- **separate from the rest of the workshop**

Connect the air compressor to the ***PPS*** system with a **hose** to eliminate vibrations and allow for maintenance (ref. LEF and LEM).

Install bypasses:

- **between each machine**
- **between tanks**
- **between filters**

Preferably, the **main** line should form a **loop**. For safety reasons, install the primary air lines at a height of **8.2 ft.** from the ground.

The diameter of the main line should be **large enough** to avoid drops in **pressure** and **to accommodate future expansion**.

The main line:

- should be installed with a **1% slope** to gravity feed condensates to low points that terminate in drains.
- should be securely mounted with a **sufficient number of sliding clamps** that will allow the pipe to expand and contract as the temperature fluctuates (ref. PPS CI).

Remove residual condensates from the main line **with down pipes** (drops) that terminate in an automatic drain system.

OFFSET FROM THE WALL

DIRECTLY TO THE WALL

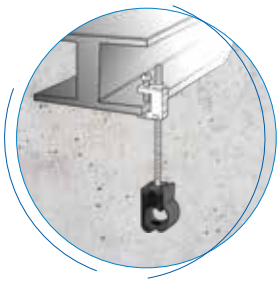

SUSPENDED

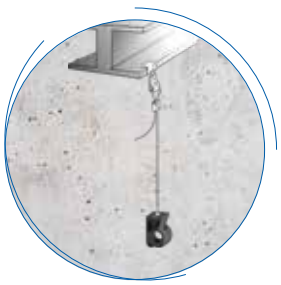

SUSPENDED BY A CABLE

FASTENED TO IPN/HEA BEAM WITH PLATES

MOUNTING THE SYSTEM

The mounting style is dictated by the layout of the facility.

Choose the method that is most structurally sound and aligned with the environment.

Always abide by the recommended pipe support distances between each clamp: the **maximum spacing is 9.8 feet.**

PPS SYSTEM **INSTALLATION EQUIPMENT**

TIGHTENING WRENCHES

SINGLE-TOOTH ADJUSTABLE WRENCH

TORQUE WRENCH

HEXAGON SOCKET

PRESSURE DRILLING TOOL

HOLE SAW FOR PIPE DRILLING

HAND TOOLS FOR CHAMFERING AND DEBURRING

CHAMFERING TOOLS FOR DRILLS

INSERTION GUIDE FOR PPS FITTINGS

ASSEMBLY GEL

PIPE CUTTER

MOUNTING CLAMPS

SHIMS FOR MOUNTING CLAMPS

MOUNTING BRACKETS FOR VALVES

PIPE INSTALLATION TOOL KIT

TIGHTENING WRENCH KITS

CHAMFERING TOOL KITS

DRILLING TOOL KITS

INSTALLING A COMPRESSED AIR SYSTEM

VIEW OUR VIDEO COLLECTION

1 CUT

The pipe should be cut perpendicular to the pipe axis.

[ref. PPS CTU]

2 CHAMFER

Chamfer the pipe on the outside to facilitate insertion and avoid damaging the seal.
Internal deburring will remove any cutting residue.

[ref. PPS CH]

3 MARK

Make a mark on the pipe to check its position in the fitting before tightening (use the mark on the fitting or on the tightening wrench).

4 LUBRICATE

Assembly gel is recommended to facilitate inserting the pipe into the fitting.
[ref. PPS AL]

5 ASSEMBLE

Slightly unscrew the nut, then push the pipe rotating it slightly to achieve the recommended insertion length.

6 TIGHTEN

Tighten the nut by hand and then tighten it as recommended.

[ref. PPS CLE]

Supplemental equipment

A **COMPLETE, UNIFIED SYSTEM**

Prevost offers a full line of pneumatic tools and accessories to accommodate every compressed air system.

SAFETY WALL MANIFOLDS

Installed at the bottom of a downpipe (drop) to quickly connect your equipment.

Air inlet: 1/2” or 3/4” FNPT

Multiple connection profiles available

Material: aluminum alloy

Robust 4-point wall attachment

Fitted with a manual drain

Air outlet: 1/2/4/6/8/10 single push safety couplings

Outlets equipped with anti-hose whip safety couplings which comply with ISO 4414 standard for user protection

Coupling body swivels to ergonomically position the button

Quick, reliable connection and disconnection

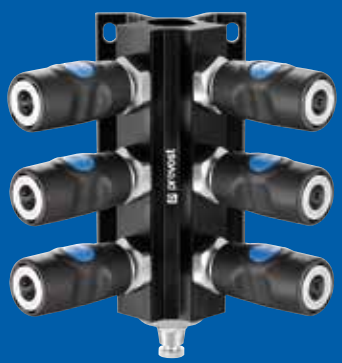

HOSE REELS

The automatic hose reel is an essential piece of equipment for an organized workshop.

The retractable hoses will **save time, increase efficiency** and enhance safety.

All automatic hose reels comply with the Machine Directive 2006/42/EC.

The following standards also apply:

- **EN ISO 12100:** 2010-11-01 "Safety of machinery - General principles for design - Risk assessment and risk reduction"
- **EN 13857:** 2008 "Safety of machinery: safety distance to prevent upper and lower limbs from reaching hazardous areas"

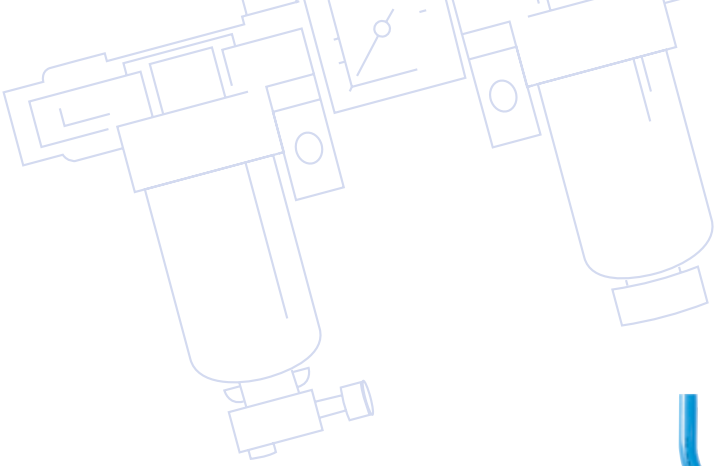

BENT LIMBS

Use a bent pipe to compensate for equipment that does not properly align or to overcome obstacles.

AIR TREATMENT UNITS

Protect pneumatic tools and equipment by purifying the compressed air.

Three treatment levels are recommended:

- **Cyclonic separator:** removes the largest solid and water particulates from the system [ref. SPC]
- **25 µm standard filtration:** eliminates contaminants present (particulates, water, etc.) in an air system. Units are equipped with a drain to remove pollutants [ref. ALTO]
- **Submicron filtration (optimum quality):** removes the smallest residual contaminants (solid, liquid and oil aerosols) from compressed air with 99.99% efficiency rates. Provides the highest level of air quality [ref. MICRO AIR]

MOUNT ACCESSORIES ON IPN/HEA BEAMS WITH PLATES

Create **ergonomic, secure** workstations.

The metal plates are designed to attach equipment on **IPN/HEA** beams:

- **In complete safety**
- **Without drilling**
- **Seamless integration**
- **Conforms with current industry standards**

Prevost services

Determining your compressed air needs can be complicated, that is why we are here to help.

If you are planning a complex installation or expanding an existing system, our in house **Technical Design team** is here to support you from start to finish.

Our team will provide a complete bill of material, quote, design and consulting services throughout the process.

Prevost provides customized **training** classes based on your business needs that cover a variety of compressed air energy topics.

Scan the QR code below to learn about our training program:

Prevost CORP
74 Brookfield Oaks Drive, Suite 3
Greenville, SC 29607 - USA
Tel.: (800) 845-7220
sales.corp@prevostusa.com - **www.prevostusa.com**

DESIGN **KALISTENE** - Photos are not contractual – Photo credits: **Prevost** - Pedro Studio Photos – Pixpocket – Laëtitia Bolatto - Semaphore - Philippe Exertier - Istock

PPS DOC22US

SAS capital: 1 840 000 Euros - RCS Annecy: B 313195026 - Siret: 313 195 026 00072
This document is non- contractual
We reserve the right to modify the product specifications without notice
Prevost publication - 06-2022 - Printed in France